Chamber filter gravity sieves

TECHNICAL DRAWING.

4 chamber gravity sieve

Article number: 100234

It is clear.

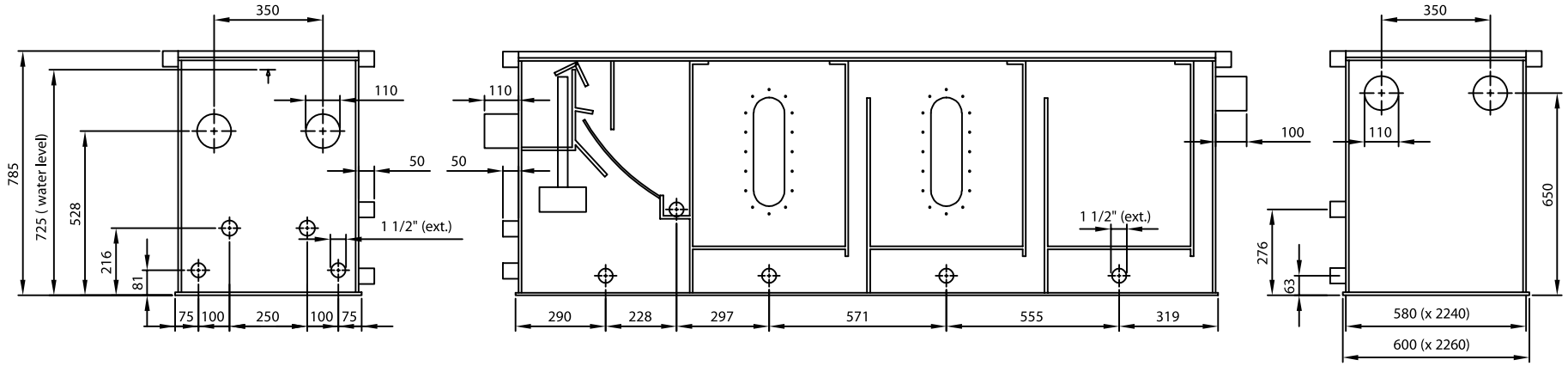

Filtreco